IVRW EC 400

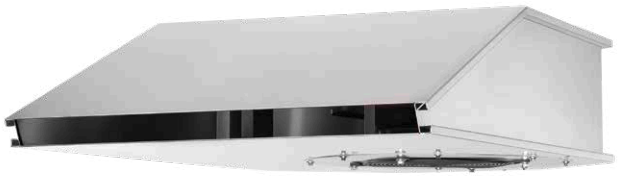

Dimensions IVRW EC 400

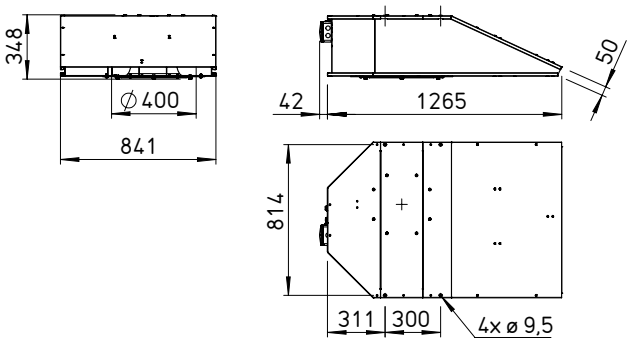

Dim. in mm

High-quality, powerful jet fans with optimal dimensions for the smallest space requirements. Latest EC technology for economical ventilation solutions in garages and commercial applications. Suitable for supply and extract ventilation with air flow temperatures of up to 40 °C.

Special features

- Low noise emission.
- High efficient motor with EC technology.
- Variable control via 0 – 10 Volt signal.
- Maximum thrust.
- Aluminium casing in lightweight construction for high efficiency level.
- Quick and easy to install due to low weight.
- Centrifugal impeller powered directly from EC external rotor motor.
- Alternating current version.
- With internal potentiometer for setting the control voltage as standard. This allows any fan speed within the type specification.

Casing

Casing made of corrosion-resistant aluminium in compact design. Aerodynamically designed inlet nozzle.

Impeller

High-performance centrifugal impeller with backward curved blades. Dynamically balanced, quality class 6.3.

Drive

High efficient EC motor.
In alternating current version (IVRW). Protection category IP54.

Motor protection

The integrated motor protection is fed to the casing terminal box for evaluation (250 V~/2 A). The fault signal is fed to the terminals. This allows effective motor protection.

Installation

With integrated mounting holes in the casing seam as standard for easy mounting to four attachment points directly on the ceiling (on-site mounting material). The use of anti-vibration mounts are recommended to prevent vibration transmission (SDZ, Accessories).

Electrical connection

Standard terminal box made of plastic (protection category IP55), outside on casing.

Installation

The Federal, state and regional rules and regulations must be observed for installation.

Accessories

Anti-vibration mounts for tensile loading (1 set = 4 pcs.)
SDZ 1 Ref. no. 01454
Vibration dampers for tensile load for vibration and noise-insulating fan suspension.
Details see page 169.

Five-step speed switch
SA-5 10 Ref. no. 40229
Five-step switch for surface mounting. For five-step control of EC fans or frequency inverters. Steps from 2 to 10 V can be set via offset. Protection class IP54.

SDZ 1



SA-5 10



Information	Page
Techn. description	148 f.
Accessory details	**Page**
Anti-vibration mounts	169

Type	Ref. no.	Thrust	Discharge speed	Max. output	Nominal speed	Sound pressure level [1] L_{PA}	Nominal motor power (output)	Nominal motor current	Wiring diagram	Max. air flow temperature	Net weight approx.	Anti-vibration mount (1 set = 4 pcs.)	
		N	m/s	V̇ m³/h	min⁻¹	dB(A)	kW	A	No.	+ °C	kg	Type	Ref. no.
40° Alternating current, 230 V, 50/60 Hz, protection category IP54													
IVRW EC 400	09802	50	33.0	4700	1950	64	1.3	6.40	1300	40	28	**SDZ 1**	01454

[1] measured in freefield conditions below 45°, at distance of 3 m