ZLE



Dimensions ZLE

Duct NW 100
Wall outlet Ø 110 mm

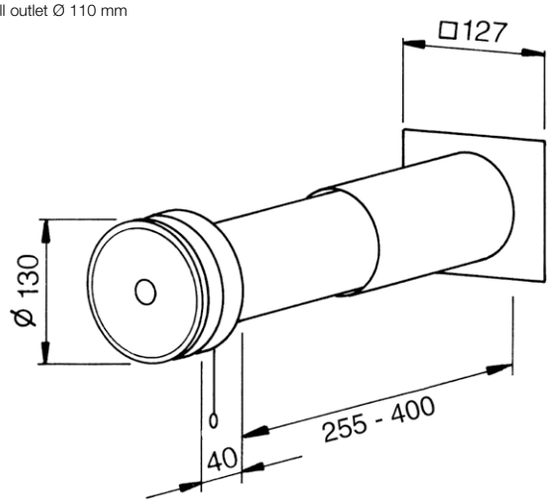

Dim. in mm

Special features – Application
Manually operated supply air element for rooms of any kind. The volume flow is changed by a four-level locking mechanism. Adjustment by means of a free-hanging drawcord. The supply air flows in through the disc valve optimally distributed, filtered (class G3[1]) and sound-insulated.

Advantages
- The dosed supply of intake air reduces draughts.
- The volume can be controlled according to requirements by adjusting the valve disc.
- Simple operation via drawcord.
- Electrical connection is not required.
- Wide valve inlet ring covers unsightly dirt marks.
- Extendable plastic wall duct for wall thicknesses from 255 to bis 400 mm.
- Good sound insulation due to built-in silencers.
- Easily replaceable filter.
- Quick and easy installation.

Installation
Simple installation in wall outlets. Insert telescopic duct from outside, adjust to wall thickness and mount. Insert rain-repellent grille into locking attachment from outside or mount with dowels. Insert valve component from inside. The supply air can be preheated in cold periods by placing the unit near a heating element. Accessibility must be ensured for air filter replacement.

Design
ZLE comes complete with:

- **Disc valve**
  Elegant, unobtrusive design made of high-quality plastic in white. Integrated drawcord for three disc settings. Insulating coating of inside of valve disc to prevent condensation.
- **Extendable wall duct**
  Two-part telescoping, made of break-resistant plastic.
- **Silencer**
  For airborne sound insulation as sound insulation against external noise. Standard sound level difference: $D_{n,e,w}$: 38 dB.
- **Air filter**
  For clean and dust-free room air (class G3[1]), replaceable.
- **External wall grille**
  Fixed, rain-repellent, made of UV-resistant plastic, white.

Filter replacement
Easily removable without tools by removing the room-side valve.

Performance data
The volume flow rate depending on the pressure difference is based on the opening gap of the valve disc. The performance values can be found in the diagram above. Sound insulation value: $D_{n,e}$: 30–35 dB (depending on the installation method and wall thickness; comparable to double glazing in protection class 2 or 3).

Number of units
The number of required supply air elements is defined pursuant to DIN 1946, pt.6 depending on the size of the living unit and wind speed (see table below).

ZLE 100	Ref. no. 00079

Accessories
Replacement air filter ISO Coarse 50 % (G3)
Unit = 10 pcs.

ELF/ZLE 100	No. 00338

Performance curves ZLE

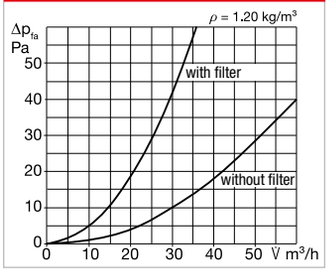

Number of units for mechanical demand-controlled ventilation

Living unit size	m²	Number ZLA/ZLE: Extract air (8 Pa)*	Number ZLA/ZLE: Supply air (4 Pa)*	Fans: Number/Unit
Hotel room	**25 m²**	2	–	1
Suite	**25 m²**	2 (3) **	–	1
Apartment I	**50 m²**	2	3 – 4	2
Apartment II	**> 50, < 80 m²**	3	4	2
Apartment III	**> 80 m²**	4	5	3
Single fam. house	**up to 120 m²**	4	5	3

* according to DIN 1946-6 tab. 10.
** if a kitchenette is also vented.

Automatic supply air element ZLA 125

The new supply air unit benefits from a standard sound level difference of up to 59 dB. In addition, the unit has a modular design which is the only one of its kind on the market.



p. 76 f

Soffit element ZLA LE

The soffit element ZLA LE directs the supply air inside the thermal insulation composite system into the window soffit by 90°. Apart from the grille in the window frame, no component can be seen on the outer facade.

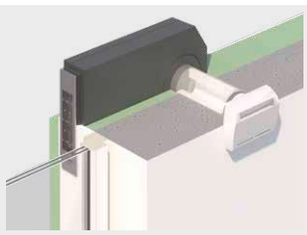

p. 78 f